NTL105

DUAL ANTENNA HIGH PERFORMANCE

OEM GNSS MODULE

PPP/RTK+HEADING

SPECIFICATION

2021

CONTENTS

1. GENERAL INFORMATION 3
2. TOP VIEW AND INDICATION 4
3. BLOCK DIAGRAM 6
4. SPECIFICATIONS 7
5. COMMUNICATION PORTS AND PIN DEFINITION 9
6. BOARD LAYOUT AND DIMENSIONS 11
CONTACTS 12

1. GENERAL INFORMATION

NTL105 dual antenna high precision multi-GNSS OEM module features the new software and hardware platform which provides the navigation solution and orientation (Heading + Pitch), the increased update rates and access to raw GNSS measurements in a compact form factor. The NTL105 module utilize concurrent reception of all supported GNSS systems.

The module with the integrated powerful PPP/RTK Engine provides high accuracy positioning and Heading determination in both static and dynamic.

The future-oriented NTL105 includes an internal flash that allows firmware update by software tool designed NTLab.

The NTL105 supports the following operation modes:

- autonomous mode (standalone mode), up to 20Hz;
- PPP mode: it receives RTCM-SSR correction and calculates Position, Velocity, Time (PVT) with high accuracy, up to 20Hz;
- RTK ROVER mode: it receives RTCM correction from the Base Station or network and calculates PVT with high accuracy, up to 20Hz;
- RTK BASE mode: it provides the Novatel or RTCM3.3 output correction data to the rover, up to 20 Hz.
- Heading determination: it provides 2D orientation of antenna system (Heading + Pitch) and PVT, up to 20Hz.

Autonomous mode is SINGLE mode. All navigation products (PVT) are only obtained from GNSS signals.

PPP mode is developed for PPP with floating ambiguities.

RTK ROVER mode is differential positioning mode whit algorithms that incorporate ambiguity solutions and correction data from the base station. The position accuracy achievable by the module (rover) depends on the baseline length used and the accuracy of the corrections data and position of the base station.

RTK BASE mode is raw GNSS measurements generation mode. In RTK BASE mode, NTL106 generates RTCM messages: 1004+1012, MSM7, 1005, 1006, 1007, 1008, 1019, 1020, 1046, 1041, 1042, 1230, 4064.100.

Heading determination is mode that allows computing of antenna system orientation parameters (heading and pitch) in addition to PVT of the Primary antenna. This function is available for navigation modules with two connected antennas. Heading determination is based on differential positioning method that calculates the coordinates of the vector connecting two antennas: Primary and Secondary. The module can operate in SINGLE + HEADING, PPP + HEADING or RTK + HEADING mode.

2. TOP VIEW AND INDICATION

Figure 2.1 – NTL105 Top View

NTL105 is implemented on the chipsets designed by NTLab company:

- 1xNT1066 is a 4-channel L1, L2, L5, S bands Radio-Frequency Front-End (RF FE) integrated circuit for GNSS signals reception and their analog processing (for amplification, filtering and down converting of the received signals to a fixed intermediate frequency);
- 1xNT1065 is a 4-channel L1, L2, L5 bands RF FE integrated circuit for GNSS signals reception and their analog processing;
- 3xNT1058 are microcontrollers which include digital Baseband Processor and 128-channels hardware correlator for signals tracking and primary processing of digital signals.

Connectors:

- X1, X2 are MMCX type connectors for external active antenna(s)[1] commutation. Central pin provides DC voltage for antenna power supply. DC voltage is wired from Pin 5 of I/O Connector XP2. It means that a host-device must provide DC voltage in accordance with active antenna requirements for NTL105.

  X1 connector is Primary antenna input. X2 connector is Secondary antenna input that is only used for Heading determination.

[1] GNSS External Active Antenna Requirements:
- Antenna voltage supply 5V;
- Maximum current 100mA;
- LNA Gain Range (minus signal loss) 20...35dB.

- XP2 is PLD2-28 connector. Form factor of the board and XP2 pinout is compatible with popular GNSS receiver families (Novatel 6xx, Trimble and others). Refer to Chapter 5 for XP2 pinout, refer to Chapter 6 for PCB dimensions.

LEDs:

- Yellow LED VD1 is indicator of the normal operation of the STM32H7 MCU. It blinks during normal operation.
- Green LEDs VD2 (A), VD4 (B) and VD12 (C) are indicators of the normal performance for 3xNT1058. It blinks once per second during normal operation.
- Red LEDs VD3 (NT1066 AOK) and VD5 (NT1065 AOK) are indicators of normal hardware operation of the analog RF FE parts. It is OFF during normal operation. Otherwise, please, check active antenna circuitry. This may indicate not appropriate level of amplification in active antenna: too low or too high.
- Green LED VD6 is indicator of the module power supply. Green Solid: means the board is powered properly.
- Red LED VD7 is indicator of the Reset control.
- Green LED VD8 is indicator of the antenna power supply. Green Solid: means the board is powered properly.
- Red LED VD9 is antenna input short-circuit indicator. It is OFF during normal operation.

3. BLOCK DIAGRAM

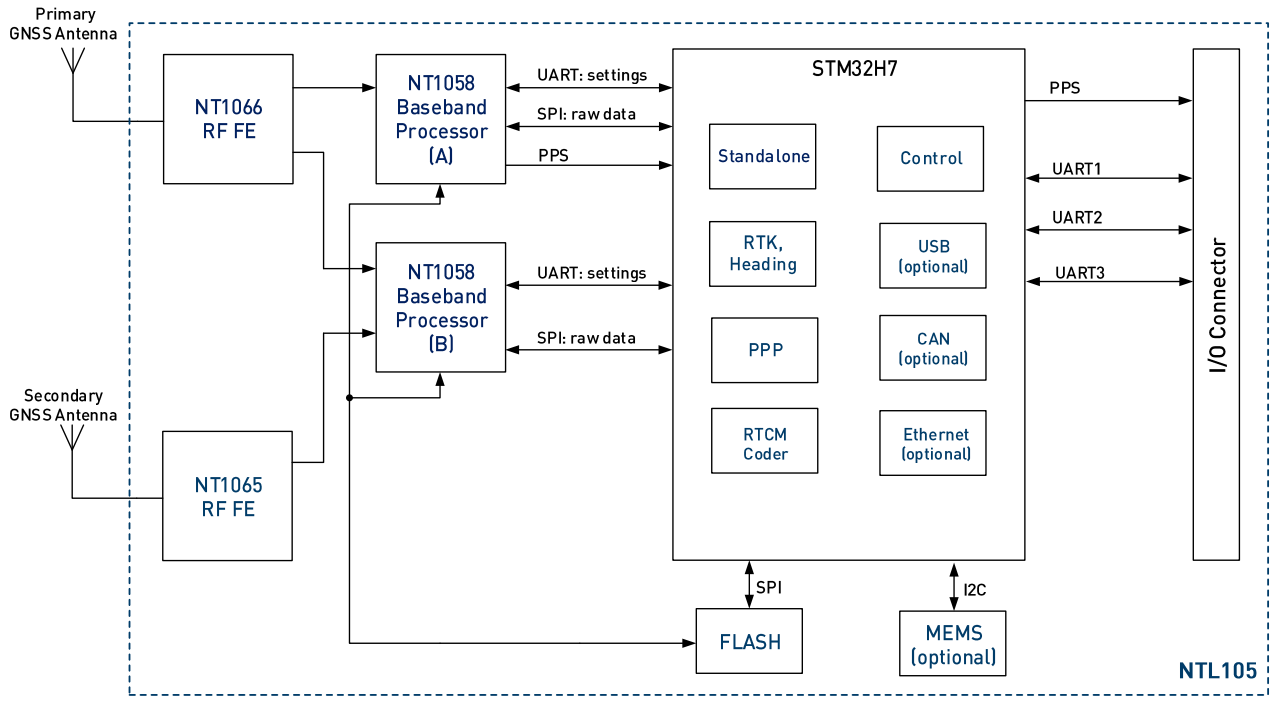

Figure 3.1 – **NTL105** Block Diagram

Notice:

- An active antenna(s) is mandatory for the **NTL105**.
- The **NTL105** has two power supply pins: one pin for the module power supply, other pin for the antenna power supply.
- UARTs are used to transmit navigation information, to input/output RTCM correction data, to monitor module status information, to configure and control the module.
- Secondary antenna connection required for Heading determination only.

4. SPECIFICATIONS

Table 4.1 – NTL105 Specification

№	Parameter	Description	Note
1	Supported GNSS constellations	NavIC L5, S GPS L1 (C/A), L2 (CM), L5 GLONASS L1 (C/A), L2 (C/A) Galileo E1, E5b, E5a BeiDou B1, B2 SBAS	1. Tracking user-selectable GNSS constellations 2. Simultaneous using of any three GNSS in the navigation solution and raw measurements 3. SBAS-option on request
2	Channels	2x128	
3	Time to First Fix (TTFF):		
	«Cold» Start	< 60 seconds	
	Signal Re-acquisition	< 2 seconds	
4	Positioning modes	Standalone	Simultaneous using of any three GNSS
		PPP	Using GPS L1, L2, GLONASS L1, L2 Galileo E1, E5b, E5a; RTCM SSR; Ready for NavIC and BeiDou (subject of PPP corrections availability)
		RTK	Using GPS L1 (C/A), L2 (CM), L5; GLONASS L1 (C/A), L2 (C/A); Galileo E1, E5b, E5a; BeiDou B1, B2; NavIC L5, S; RTCM 3.3
		Heading determination	GPS L1, L2, GLONASS L1, L2
5	Operation modes	RTK ROVER	RTCM 3.3
		RTK BASE	RTCM 3.3, NovAtel OEM6
6	Operation conditions	Static mode	Static receiver, static base station
		Kinematic mode	Moving receiver, static base station
		Moving Base	Moving receiver, moving base station
7	Data Output Formats	NMEA 2.3, NMEA 4.11	
		NTL Binary	
		RTCM 3.3 (MSM + Legacy messages)	
		NovAtel OEM 6	
8	Data update rates:		
	Standalone mode	20 Hz	1, 2, 5, 10 Hz are available
	PPP mode	20 Hz	
	RTK mode	20 Hz	
	Heading	20 Hz	
	Raw ranging measurements	20 Hz	
9	Measurement precision (one sigma):		
	C/A pseudoranges	20 cm	Smoothed pseudoranges
	L1, L2 carrier phase	0.8 mm	

Table continuation 4.1 – NTL105 Specification

10	Accuracy (RMS)		
	Horizontal:		
	Standalone mode	1.5 m	Depends on atmospheric conditions, satellite visibility and geometry, multipath conditions, GNSS antenna.
	RTK FIX mode	0.005 m + 0.5 ppm	
	PPP mode	0.05 m	
	Velocity	0.02 m/s	
	Vertical:		
	Standalone mode	2.0 m	Depends on atmospheric conditions, satellite visibility and geometry, multipath conditions, GNSS antenna
	PPP mode	0.1 m	
	RTK FIX mode	0.008 m + 1.0 ppm	
	Velocity	0.03 m/s	
11	Angles Accuracy (RMS):		
	Pitch	0,15 deg	Baseline length ~2m
	Heading	0,06 deg	
12	Timing Accuracy	+/- 20 ns	The PPS adjusts to the NavIC/Galileo/BeiDou systems time with an accuracy of +/-20 ns. It is possible to additionally shift the PPS edge along the time axis to the left/right (perform calibration). Voltage logic level is 2.5V, pulse width is 1ms. PPS is triggered by the leading edge. Polarity cannot be reversed. Duty cycle can be reversed (up to 1sec).
13	Interfaces	3xUART, 1xPPSout	
14	Maximum operating limits		
	Velocity	515 m/s	
	Altitude	18000 m	
15	Operating voltage	3...5.5V	
16	Power consumption	Up to 3.6 W	
17	Dimensions (L x W x H)	71mm x 46mm x 12,8mm	
18	Weight	<25g	
19	Operating temperature	–40 °C ... +80 °C	
20	Storage temperature	–55 °C ... +85 °C	

Warning: All specifications are at an ambient temperature of 25 °C.

5. COMMUNICATION PORTS AND PIN DEFINITION

Table 5.1 – I/O connector XP2 pin definitions

Pin No	Name	I/O	Description
1	USB_ID	Input	STM32H7 MCU USB FS[2]
2	USB_VBUS	Input	STM32H7 MCU USB FS[2]
3	BOOT	Input	STM32H7 MCU boot mode selection[2]
4	TPO-MID	Output	STM32H7 MCU ETHERNET[2]
5	LNA_PWR	Power	Antenna power supply
6	Power	Power	NTL105 power supply voltage
7	USB_D-	I/O	STM32H7 MCU USB FS[2]
8	USB_D+	I/O	STM32H7 MCU USB FS[2]
9	GRESET	Input	Reset control (active-GND)
10	MF01[1]	I/O	STM32H7 MCU GPIO
11	MF02[1]	I/O	STM32H7 MCU GPIO
12	D3/CAN_Rx	Input	UART Rx line[3] or CAN[2] Rx line (CMOS_3.0)
13	EVENT[1]	Input	STM32H7 MCU
14,17,20,22	GND	Power	Signal and Power Ground
15	TXD1	Output	UART Tx line[3] (CMOS_3.0)
16	RXD1	Input	UART Rx line[3] (CMOS_3.0)
18	TXD2	Output	UART Tx line[3] (CMOS_3.0)
19	RXD2	Input	UART Rx line[3] (CMOS_3.0)
21	PV	Output	«Position Valid» indicator (CMOS_3.0)
23	PPS	Output	PPS time mark[4] (CMOS_2.5)
24	D3/CAN_Tx	Output	UART Tx line[3] or CAN[2] Tx line (CMOS_3.0)
25	TPO+	Output	STM32H7 MCU Ethernet[2]
26	TPI+	Input	STM32H7 MCU Ethernet[2]
27	TPO-	Output	STM32H7 MCU Ethernet[2]
28	TPI-	Input	STM32H7 MCU Ethernet[2]
Notes	1 - Signals implemented in hardware for compatibility with Trimble and Novatel receivers, having the same form factor; not supported in actual firmware. 2 – It is hardware ready; basic firmware doesn't provide such options; may be developed on demand. 3 – *Digital inputs/outputs*: V_{IL} : 0.3V_{DD} (max); V_{IH} : 0.7V_{DD} (min); V_{IH} : 3.0V (max); V_{DD}=2.9V; V_{OL} : 0.3V_{DD} (max); V_{OH} : 0.7V_{DD} (min); V_{OH} : 3.0V (max); V_{DD}=2.9V. 4 – *Digital inputs/outputs*: V_{IL} : 0.7V (max); V_{IH} : 1.75V (min); V_{IH} : 2.5V (max); V_{OL} : 0.7V (max); V_{OH} : 1.75V (min); V_{OH} : 2.5V (max).		

Table 5.2 – Basic configuration of NTL105 UART channels

Pin No	Name	Description
15	UART1 Tx	Available data formats: • NTL Binary for nav. data transmission and control or NMEA-0183 for nav. data transmission; • NovAtel, RTCM3.3 (MSM + Legacy messages) for raw ranging data transmission; Baud rate: 9600...460800; Default settings: 460800 Baud, 8 bits, no parity bit, 1 stop bit, no data.
16	UART1 Rx	Available data formats: • RTCM3.3 Base station data input or RTCM-SSR messages; • NTL Binary for settings control; Baud rate: 9600...460800. Default settings: 460800 Baud, 8 bits, no parity bit, 1 stop bit, NTL Binary.
18	UART2 Tx	Available data formats: • NTL Binary for nav. data transmission and control or NMEA-0183 for nav. data transmission; • NovAtel, RTCM3.3 (MSM + Legacy messages) for raw ranging data transmission; Baud rate: 9600...460800; Default settings: 460800 Baud, 8 bits, no parity bit, 1 stop bit, NTL Binary.
19	UART2 Rx	Available data formats: • NTL Binary for settings control; Baud rate: 9600...460800. Default settings: 460800 Baud, 8 bits, no parity bit, 1 stop bit, NTL Binary.
24	UART3 Tx	Available data formats: • NTL Binary for nav. data transmission and control or NMEA-0183 for nav. data transmission; • NovAtel, RTCM3.3 (MSM + Legacy messages) for raw ranging data transmission; Baud rate: 9600...460800; Default settings: 460800 Baud, 8 bits, no parity bit, 1 stop bit, no data.
12	UART3 Rx	Available data formats: • RTCM3.3 Base station data input or RTCM-SSR messages; • NTL Binary for settings control; Baud rate: 9600...460800. Default settings: 460800 Baud, 8 bits, no parity bit, 1 stop bit, NTL Binary.

6. BOARD LAYOUT AND DIMENSIONS

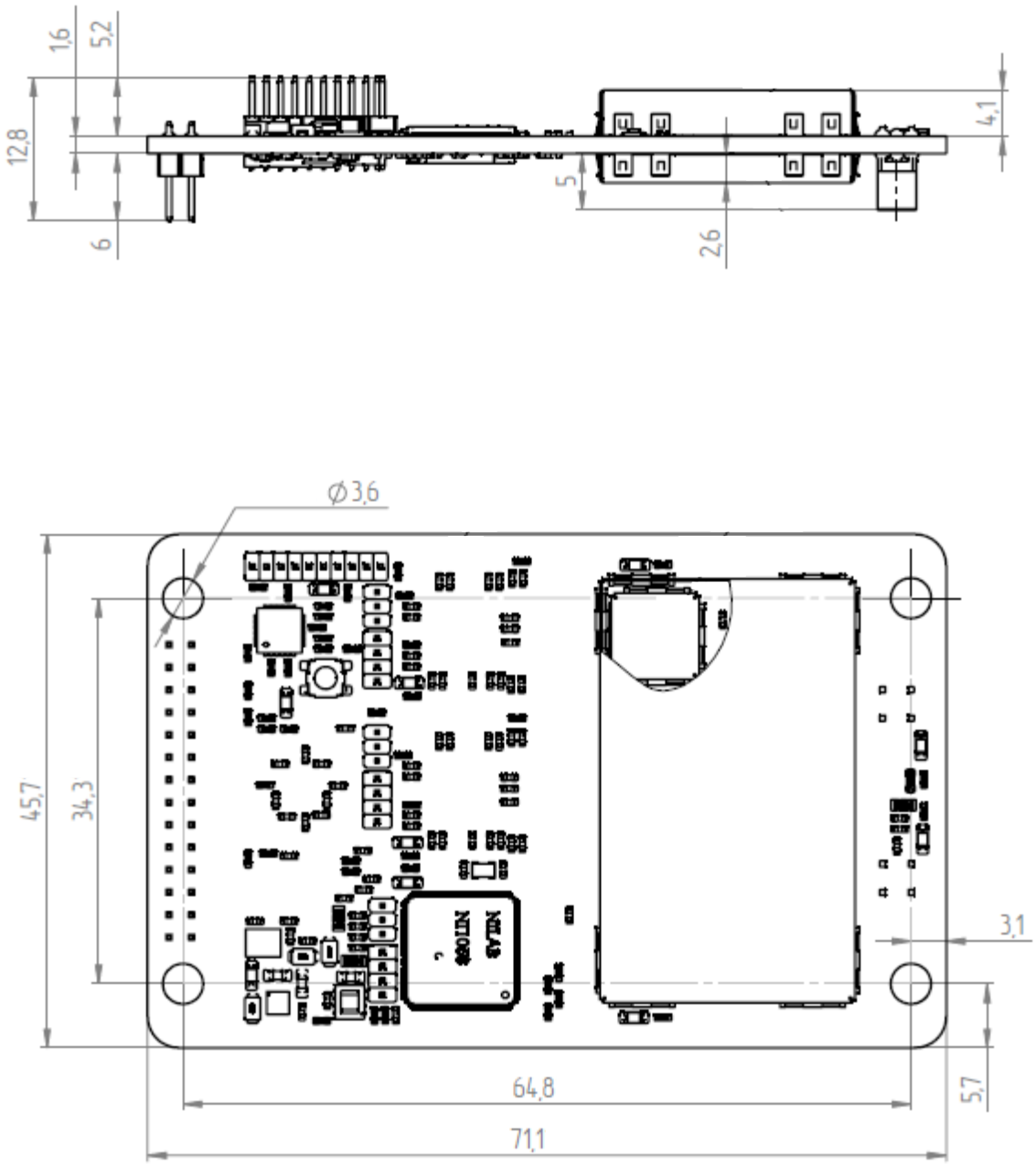

Figure 6.1 – NTL105 Board Layout and Dimensions

CONTACTS

For complete contact information visit us at **www.ntlab.lt**

Office
NTLAB, UAB
Švenčionių g. 112, Nemenčinė, LT-15168 Vilniaus r., Lithuania
Tel.: +370 6 169 5418
e-mail: sales@ntlab.lt